Karlsruhe Institute of Technology

Institute of Applied Informatics and Formal Description Methods (AIFB)

Modelling Clinical Pathways

SMWCon Fall 2015

Tobias Weller, Maria Maleshkova, Martin Wagner, Hannes Kenngott and Rudolf Rempel

Motivation

Motivation

Motivation

- Clinical pathways:

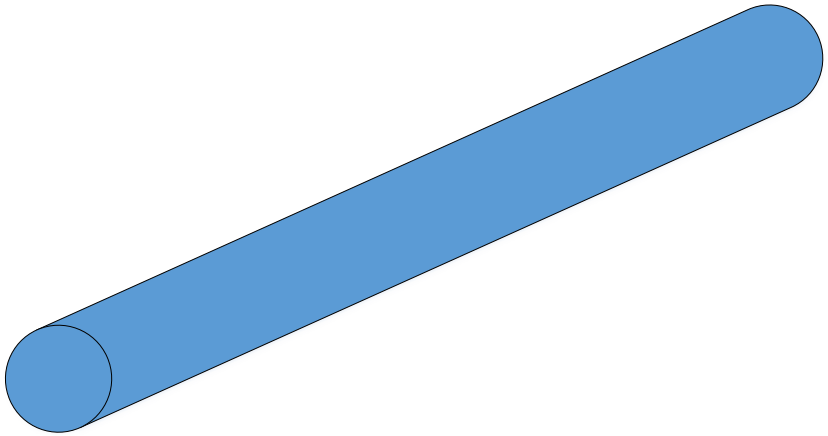

Motivation

- Clinical pathways:
  - There is not only one pathway but more

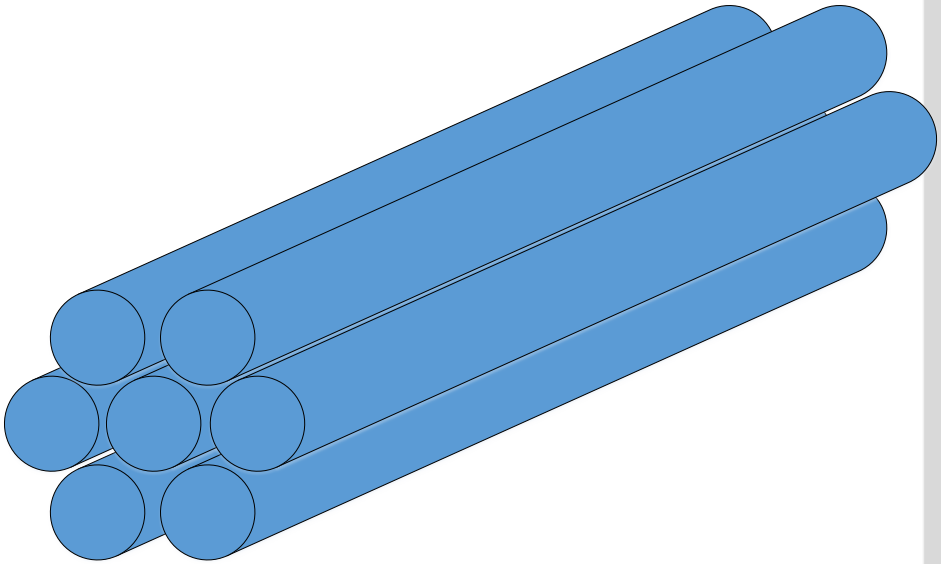

Motivation

- Clinical pathways:
  - There is not only one pathway but more
  - Different pathways have different degree of complexity

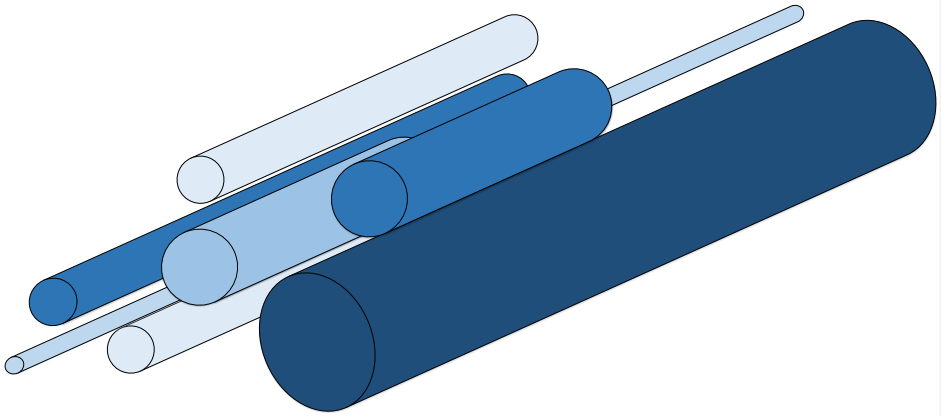

Motivation

- Clinical pathways:
  - There is not only one pathway but more
  - Different pathways have different degree of complexity
  - Pathways can be grouped

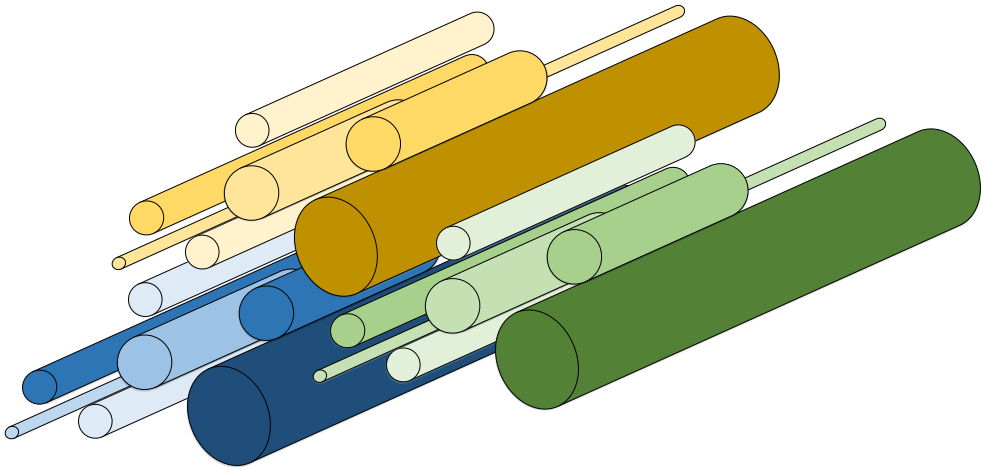

Motivation

- Well-defined processes improve the outcome of hospitals [1] [2]
- Modelling and enriching BPMN with meta-information is still difficult
- We present a possibility to model BPMN in a Semantic Media Wiki and enrich it with meta-information

[1] Clinical pathways: effects on professional practice, patient outcomes, length of stay and hospital costs: Rotter T., Kinsman L, James E, Machotta A, Gothe H, Willis J, Snow P, Kugler J. *Cochrane Database Syst* Rev. 2010 Mar 17;(3)

[2] Computer-interpretable clinical guidelines: a methodological review: Peleg M. *Journal Biomed Inform*. 2013 Aug;46(4):744-63

Surgipedia

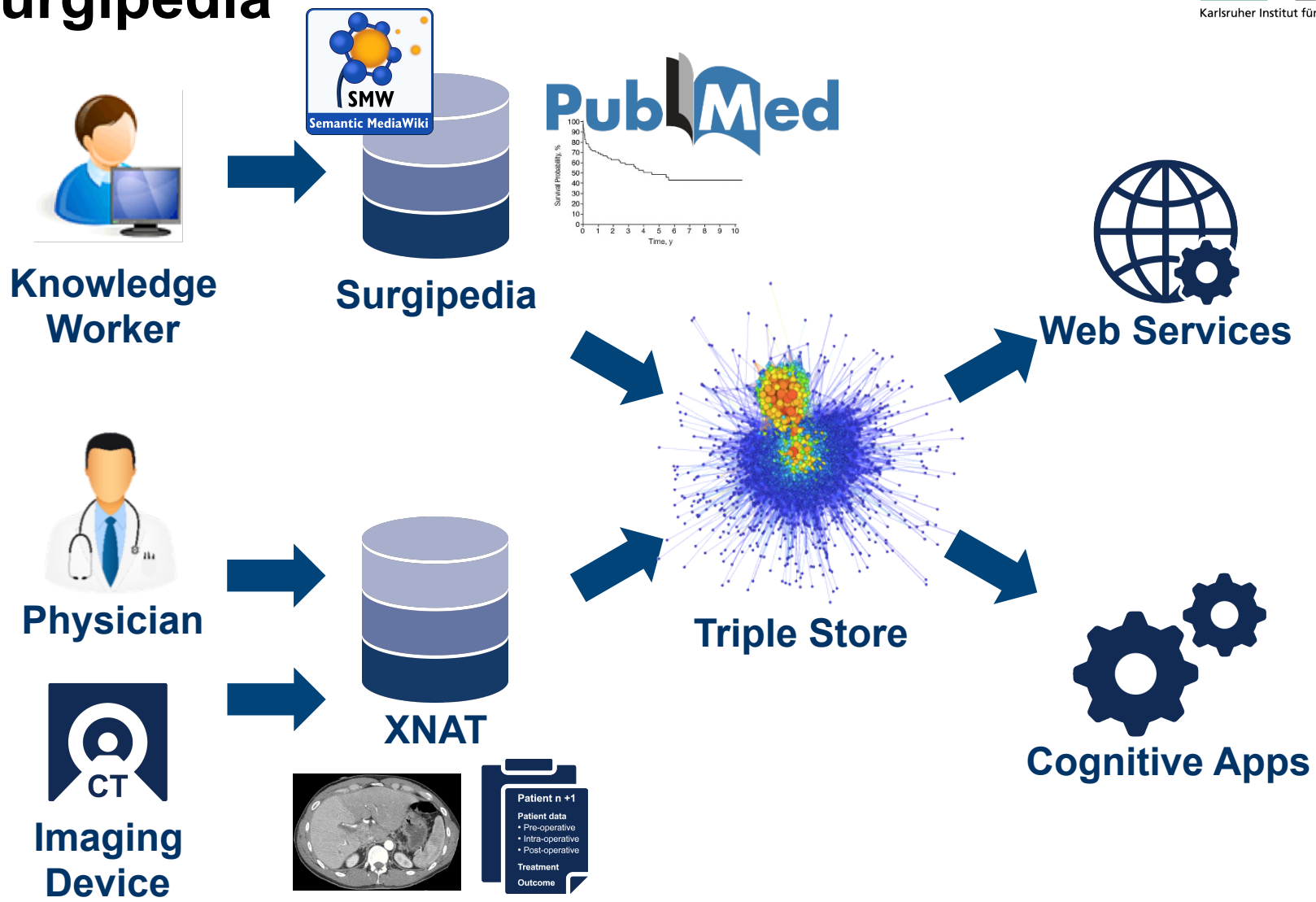
SMW
Semantic MediaWiki
PubMed
Survival Probability, %
Time, y
Knowledge Worker
Surgipedia
Web Services
Physician
Triple Store
XNAT
CT
Imaging Device
Cognitive Apps
Patient n +1
Patient data
• Pre-operative
• Intra-operative
• Post-operative
Treatment
Outcome

Surgipedia

Karlsruher Institut für Technologie

Cognition-guided Surgery

SFB/Transregio 125

Tweller Talk Preferences Watchlist Contributions Log out

Page Discussion Read Edit View history More Search

Main page
Recent changes
Random page
Help

Tools
What links here
Related changes
Upload file
Special pages
Printable version
Permanent link
Page information
Browse properties
Browse Wiki & Semantic Web

Übelkeit?

A physician asks the patient about if he has any nausea at the moment.

Categories: GI-Passage question | RRO

Facts about "Übelkeit?"

Has ApprovedByRudiStatus	False
Has AskedQuality	Status of symptom
Has ExactMatch	http://422587007
Has IC	Morning ward round on surgical normal station
Has Objective	GI-Passage
Has PossibleValueOfAskedQuality	Yes and No
Has Question	Do you (patient) have any nausea at the moment?
Has Questioner	Resident physician
Has Respondent	Patient
Has SNOMEDCTID	422587007
Has UnitOfAskedQuality	Boolean data type

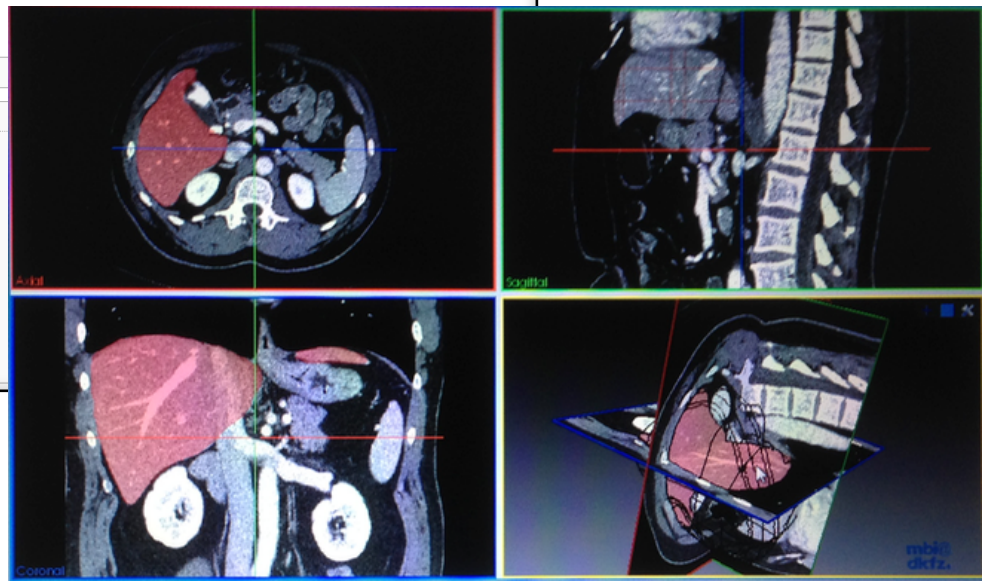

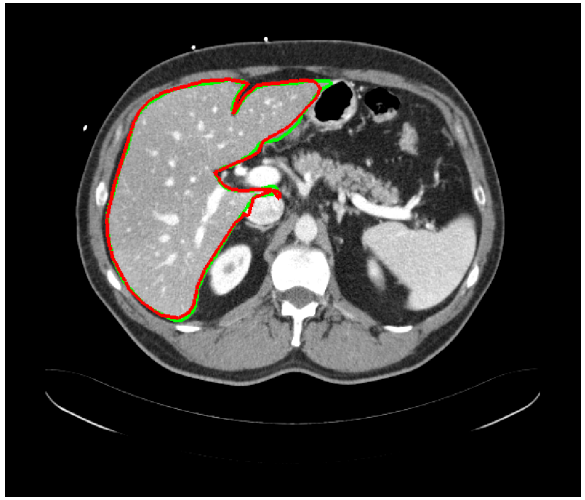

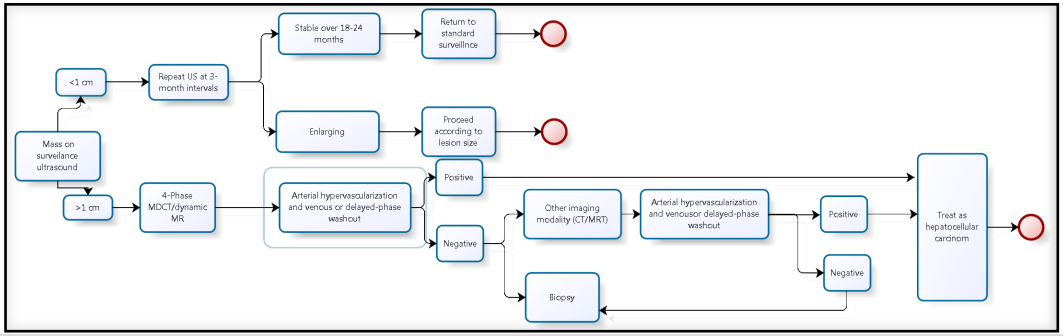

Surgipedia

- Technical Detail:
  - 16 extensions in total

Product	Version
MediaWiki	1.25.1
PHP	5.6.13-0+deb8u1 (apache2handler)
MariaDB	5.5.44-MariaDB

Semantic extensions				
Extension	**Version**	**License**	**Description**	**Authors**
Semantic Forms	3.3 (d8471bc) 19:04, 21 June 2015	GPL-2.0+	Forms for adding and editing semantic data	Yaron Koren, Stephan Gambke and others
Semantic MediaWiki	2.2.1	GPL-2.0+	Making your wiki more accessible - for machines *and* humans (online documentation)	Markus Krötzsch, Jeroen De Dauw, James Hong Kong and others
Semantic Result Formats	1.9	License	Additional result formats for Semantic MediaWiki queries	James Hong Kong, Stephan Gambke, Jeroen De Dauw, Yaron Koren and others
Semantic Web Browser	0.4 (ee540d2) 17:04, 25 June 2015		Adds a special page Browse Wiki & Semantic Web	Benedikt Kämpgen, Anna Kantorovitch and Andreas Adler

Surgipedia

- Statistics:
  - 90 User
  - 61,432 Triples
  - 4,197 Pages
  - 509 Categories
  - 525 Properties (total)

Semantic BPMN Extension

- We used bpmn-js from bpmn-io[1] to visualize the bpmn network

- Extended bpmn-js with the MW API to create and annotate Wiki pages

[1] https://github.com/bpmn-io/bpmn-js

Semantic BPMN Extension

- Installation via uploding extension folder into MW extension folder and adding following statement to the LocalSettings.php

```
require_once "$IP/extensions/SemanticBPMN/SemanticBPMN.php”;
```

- Accessible via Special Pages
- Developed in JavaScript and CSS
- Uses MW API to create and edit pages

SBPMN: Create new Diagram

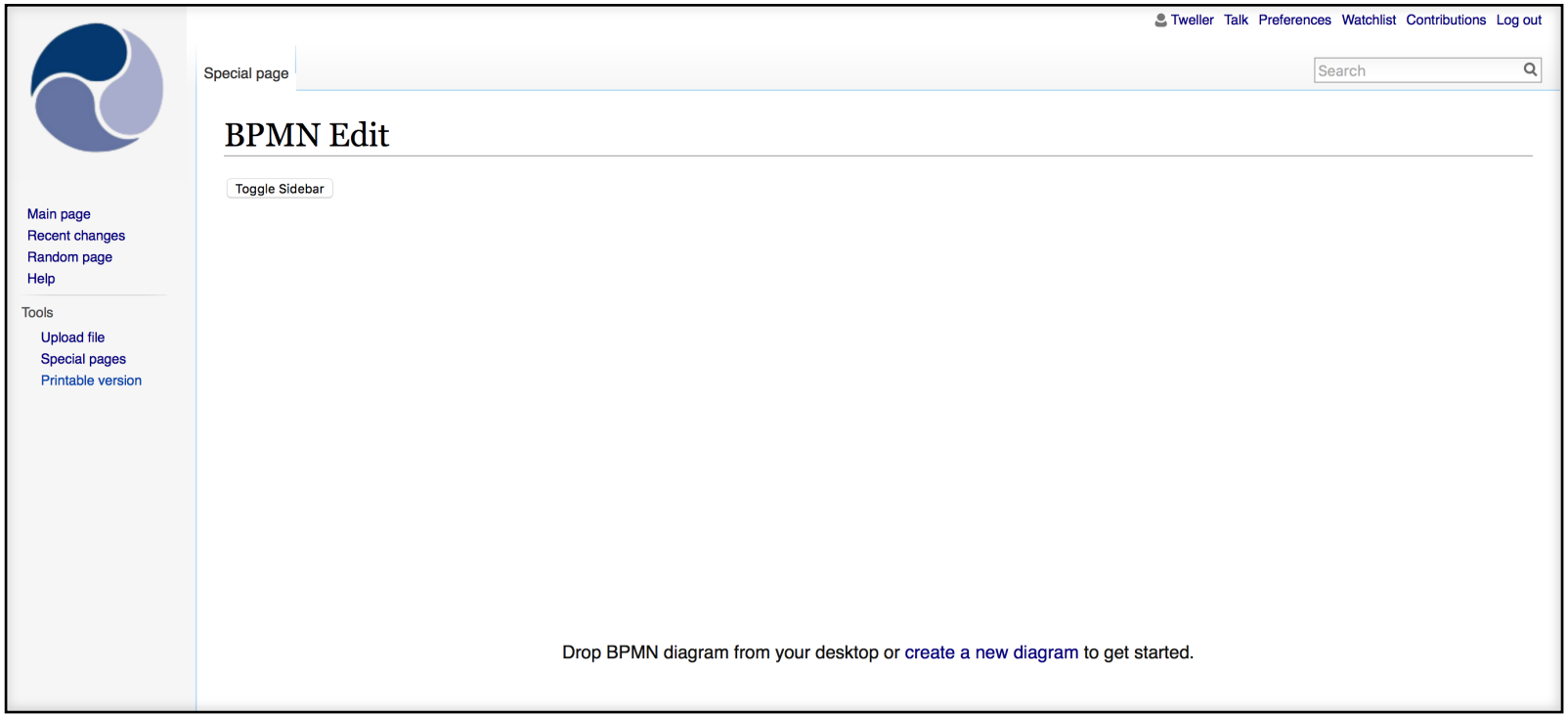

SBPMN: Create new Diagram

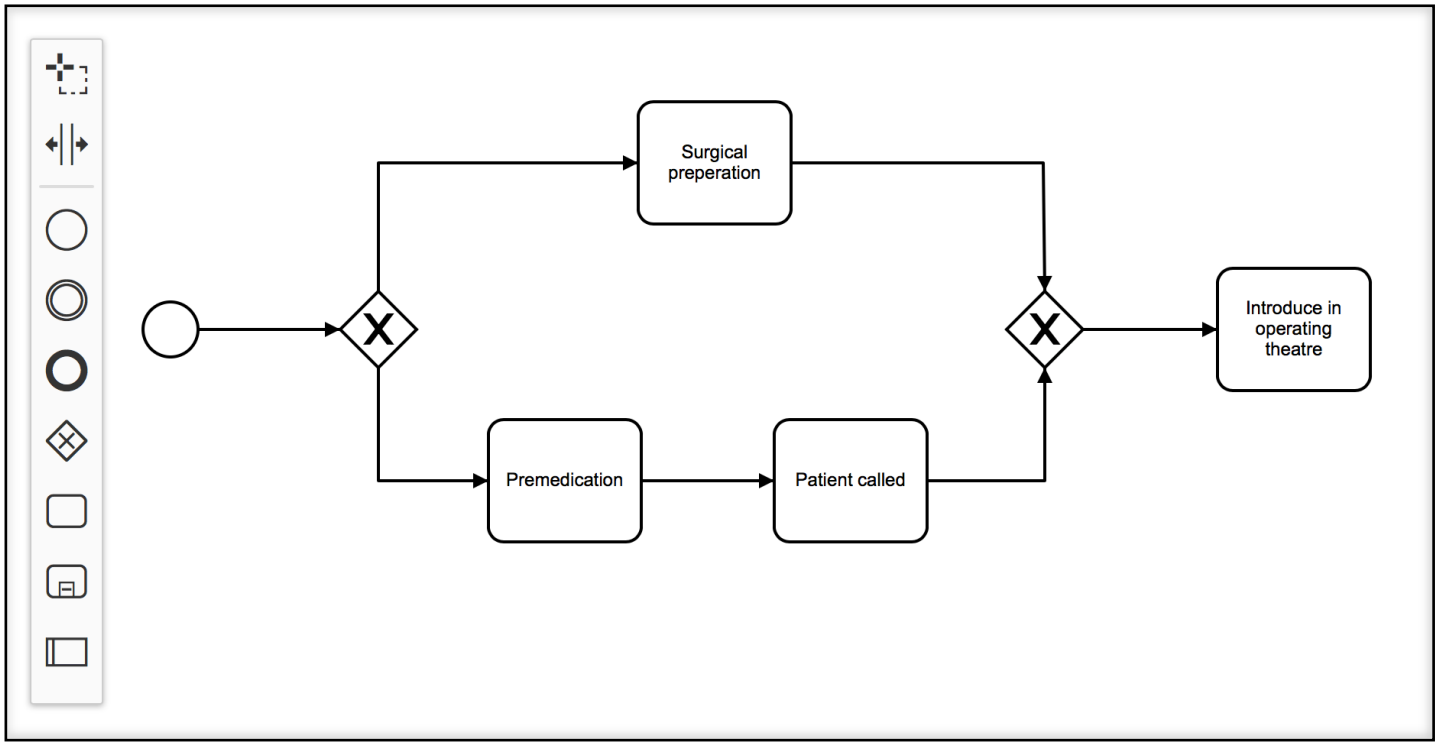

SBPMN: Create new Diagram

Tweller Talk Preferences Watchlist Contributions Log out

Page Discussion Read Edit View history More Search

ExclusiveGateway 0jcg7oz

SequenceFlow_01xka65 SequenceFlow_0g1apkt SequenceFlow_0h2mk3k

Category: BPMN ExclusiveGateway

Facts about "ExclusiveGateway 0jcg7oz" RDF feed

Incoming SequenceFlow 01xka65 +

Outgoing SequenceFlow 0g1apkt + and SequenceFlow 0h2mk3k +

Main page
Recent changes
Random page
Help

Tools
What links here
Related changes
Upload file
Special pages
Printable version
Permanent link
Page information
Browse properties
Browse Wiki & Semantic Web

This page was last modified on 13 October 2015, at 20:12.

Privacy policy About SurgiPedia Disclaimers

SBPMN: Create new Diagram

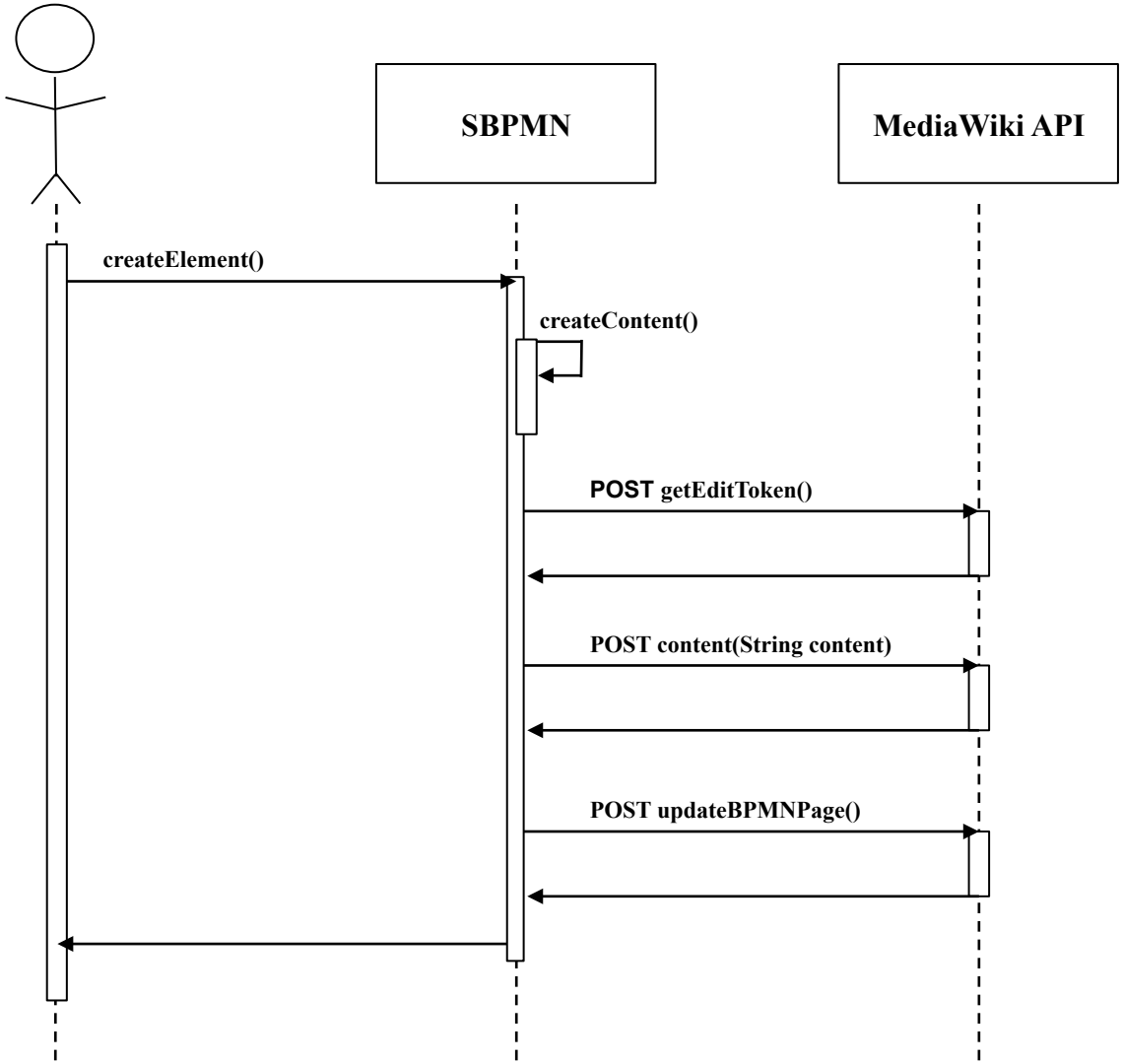

SBPMN: Upload Diagram

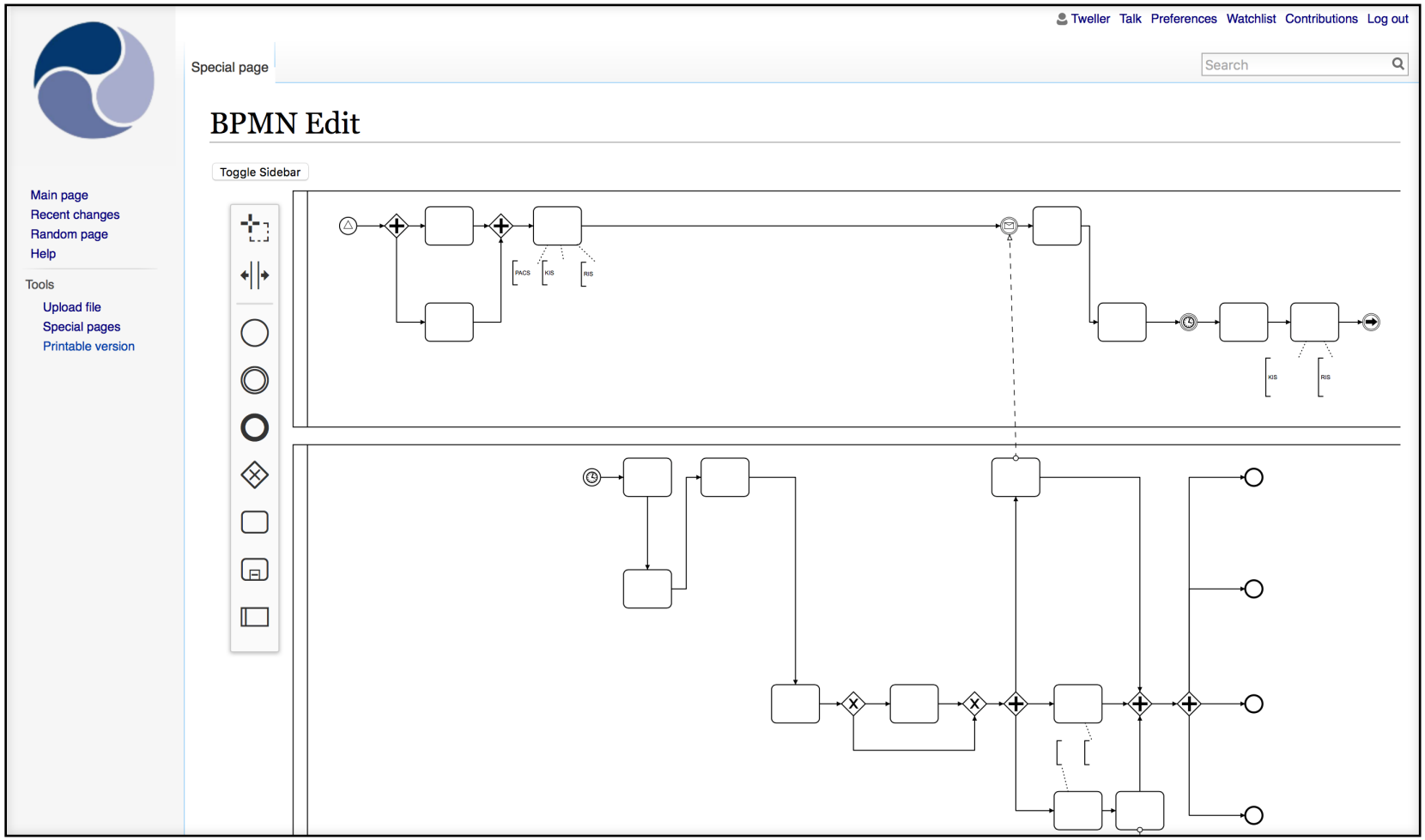

SBPMN: Upload Diagram

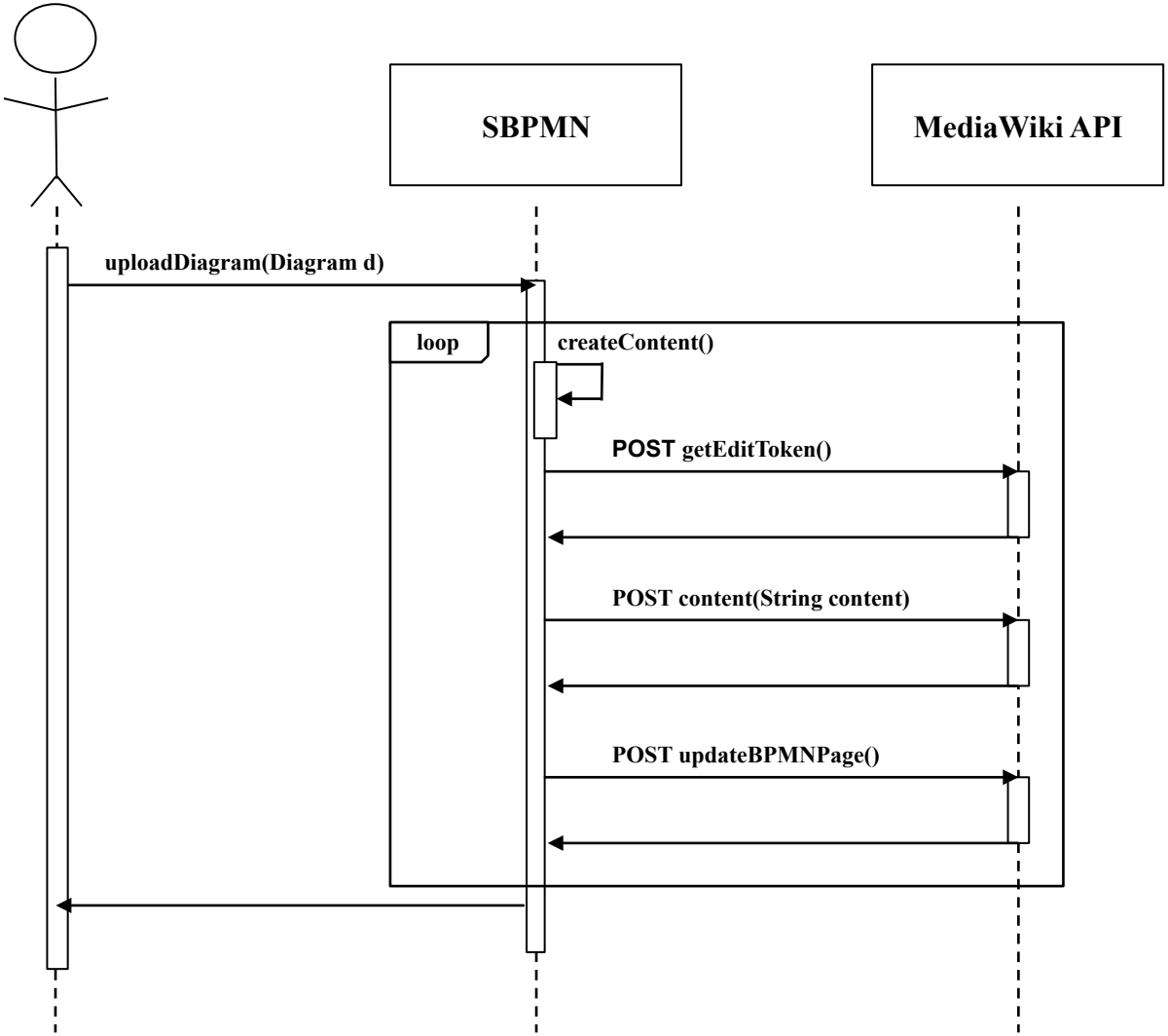

SBPMN: Export Diagram

- BPMN diagram (XML)
- SVG image

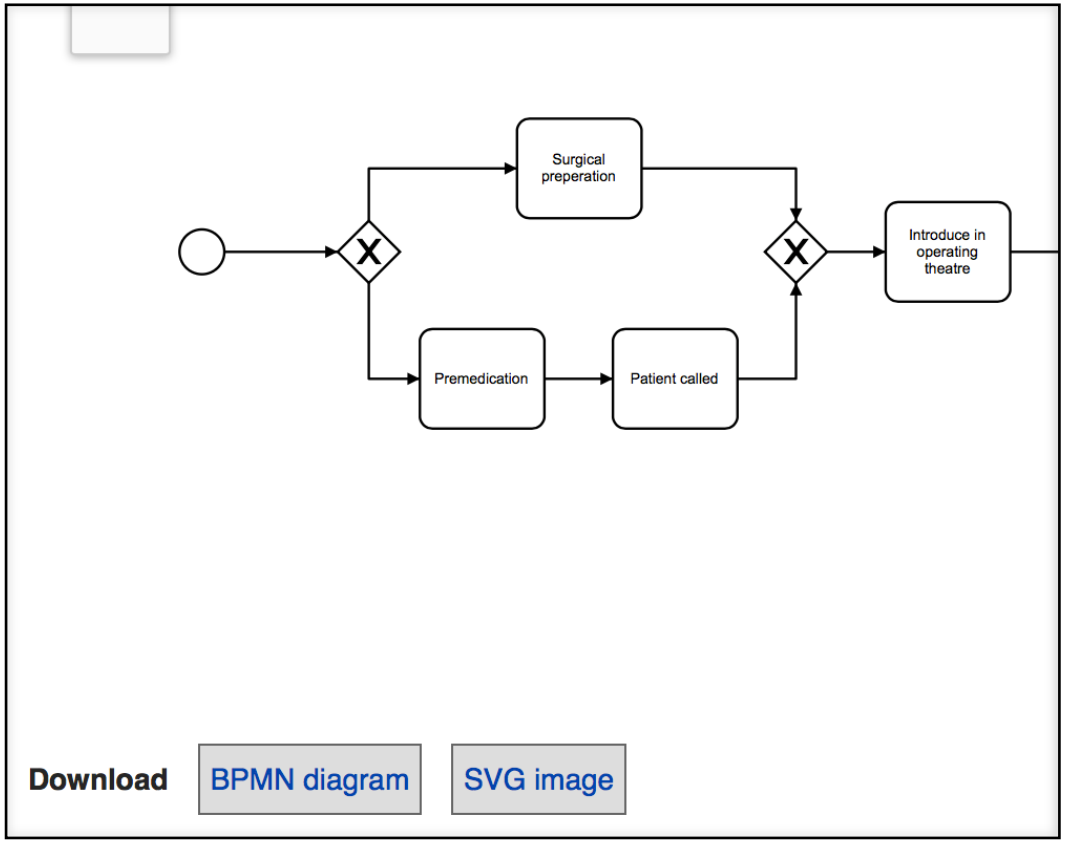

SBPMN: Export Diagram

- BPMN diagram (XML)
- SVG image

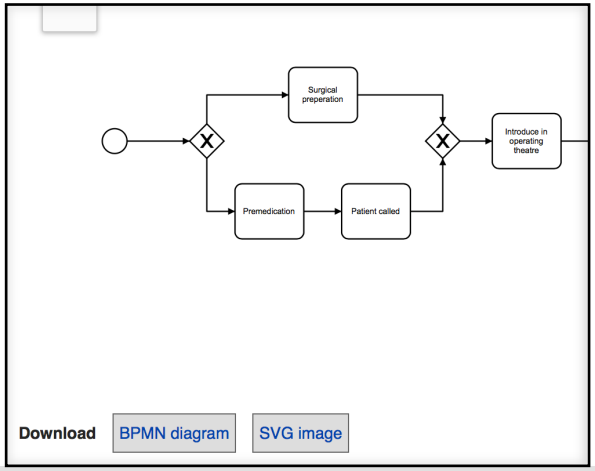


```xml
<?xml version="1.0" encoding="UTF-8"?>
<bpmn2:definitions xmlns:bpmn2="http://www.omg.org/spec/BPMN/20100524/MODEL" xmlns:bpmndi="http://www.omg.org/spec/BPMN/20100524/DI" xmlns:di="http://www.omg.org/spec/DD/20100524/DI" xmlns:dc="http://www.omg.org/spec/DD/20100524/DC" xmlns:xsi="http://www.w3.org/2001/XMLSchema-instance" id="sample-diagram" targetNamespace="http://bpmn.io/schema/bpmn" xsi:schemaLocation="http://www.omg.org/spec/BPMN/20100524/MODEL BPMN20.xsd">
  <bpmn2:process id="Process_1" isExecutable="false">
    <bpmn2:startEvent id="StartEvent_1">
      <bpmn2:outgoing>SequenceFlow_0672ebu</bpmn2:outgoing>
    </bpmn2:startEvent>
    <bpmn2:exclusiveGateway id="ExclusiveGateway_0twpw54">
      <bpmn2:incoming>SequenceFlow_0672ebu</bpmn2:incoming>
      <bpmn2:outgoing>SequenceFlow_1jug90v</bpmn2:outgoing>
      <bpmn2:outgoing>SequenceFlow_1a8ezjl</bpmn2:outgoing>
    </bpmn2:exclusiveGateway>
    <bpmn2:sequenceFlow id="SequenceFlow_0672ebu" sourceRef="StartEvent_1" targetRef="ExclusiveGateway_0twpw54" />
    <bpmn2:task id="Task_07fn0gp" name="Surgical preperation">
      <bpmn2:incoming>SequenceFlow_1jug90v</bpmn2:incoming>
      <bpmn2:outgoing>SequenceFlow_1nh5y3y</bpmn2:outgoing>
    </bpmn2:task>>
```

SBPMN: Change Element (Type)

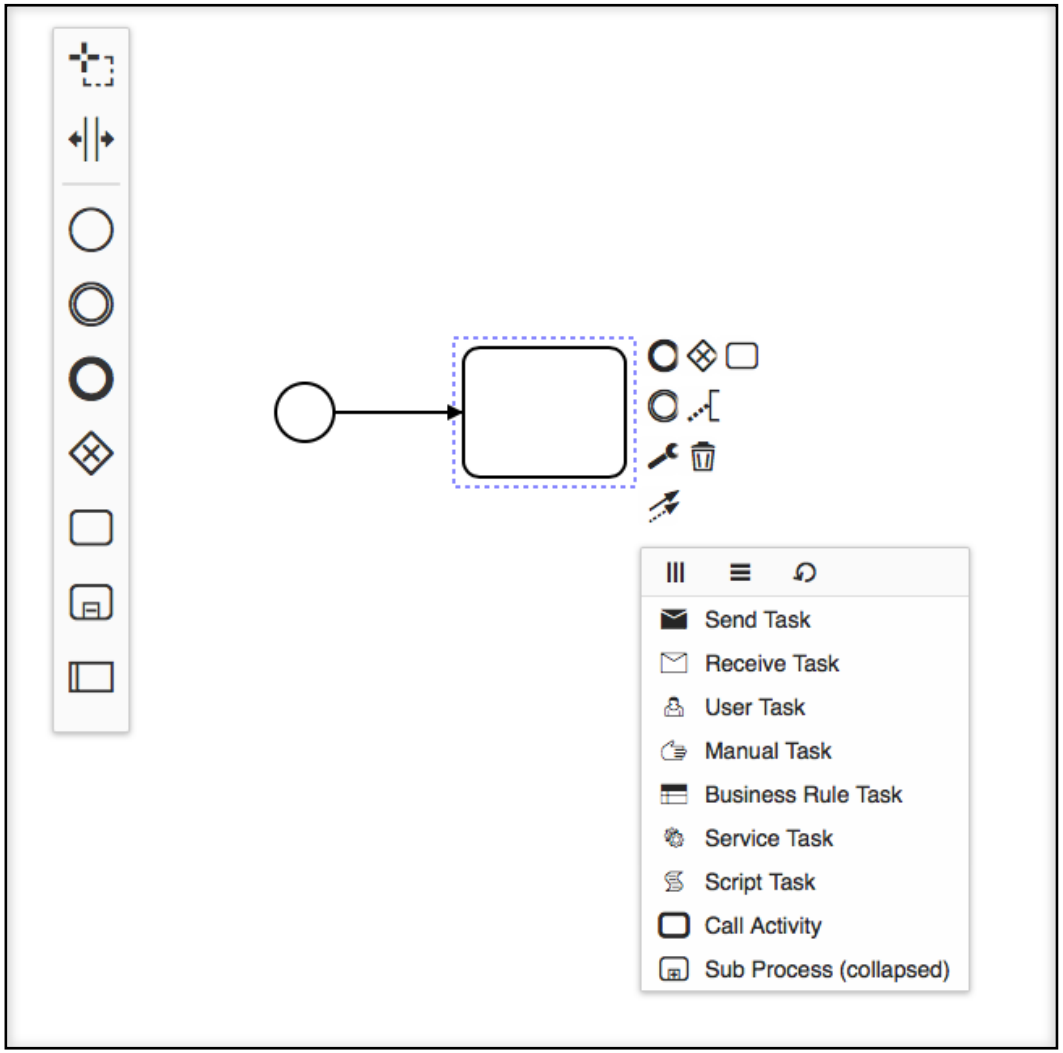

SBPMN: Change Element (Type)

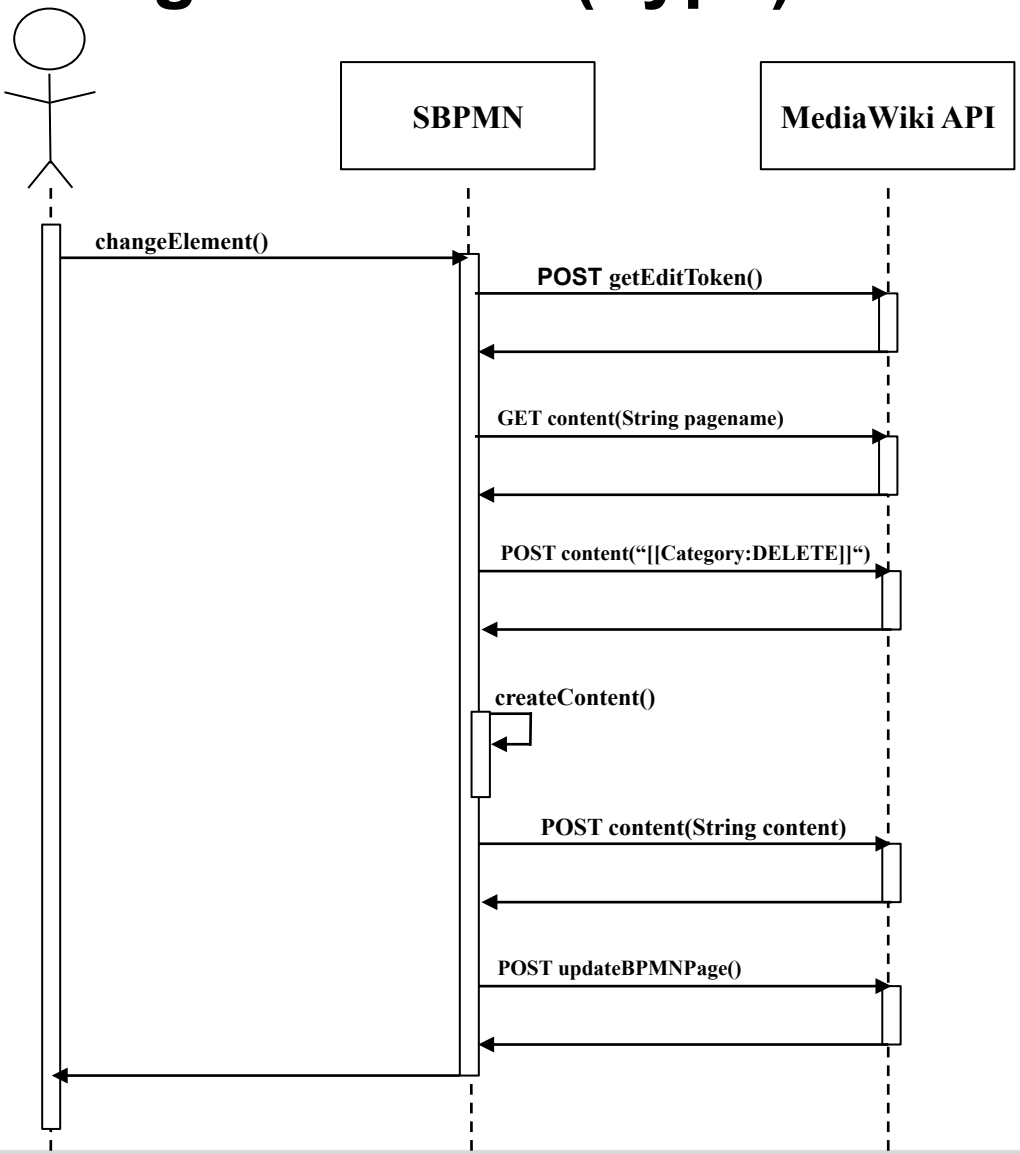

SBPMN: Change Element (Content)

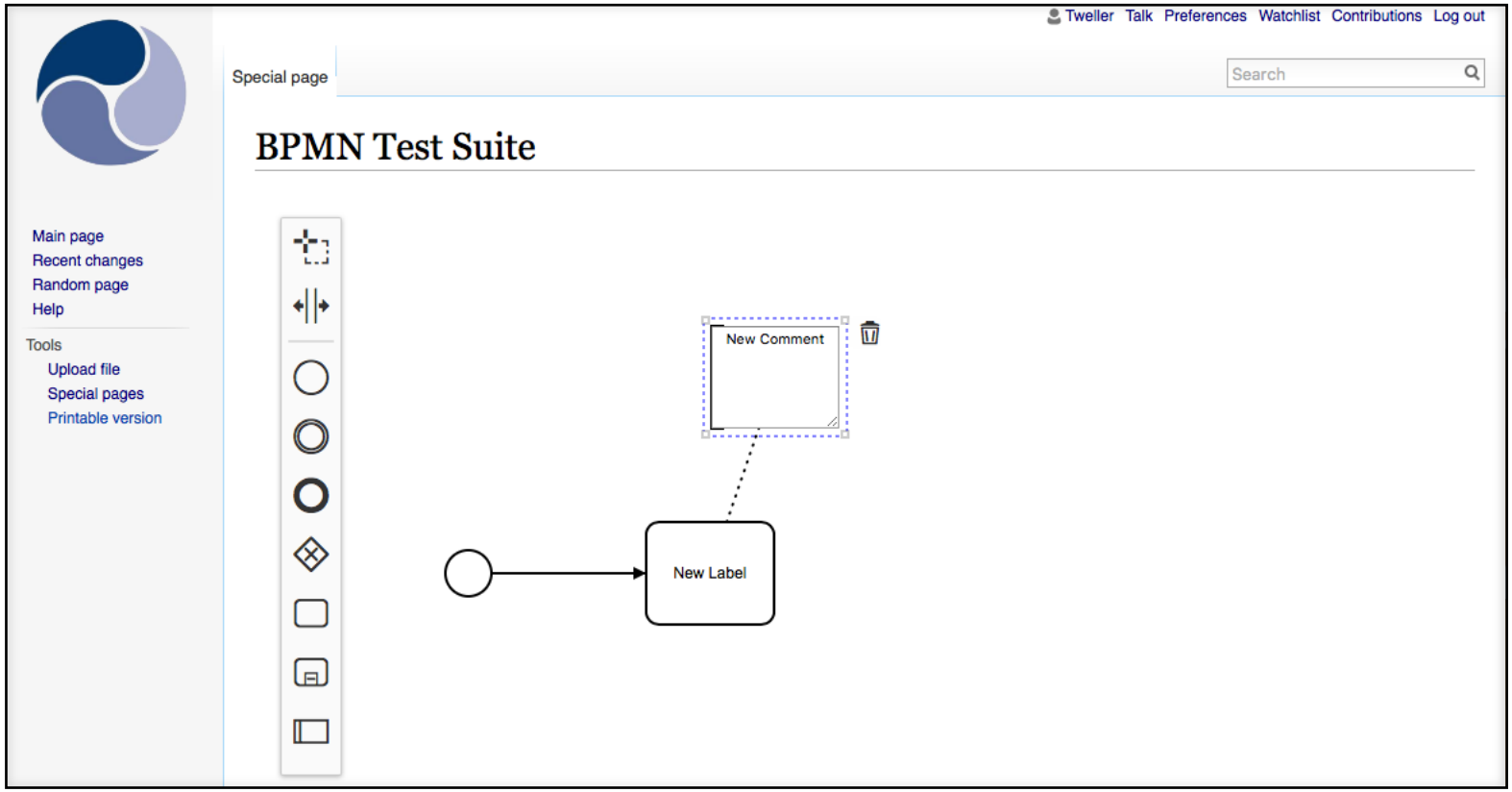

SBPMN: Change Element (Content)

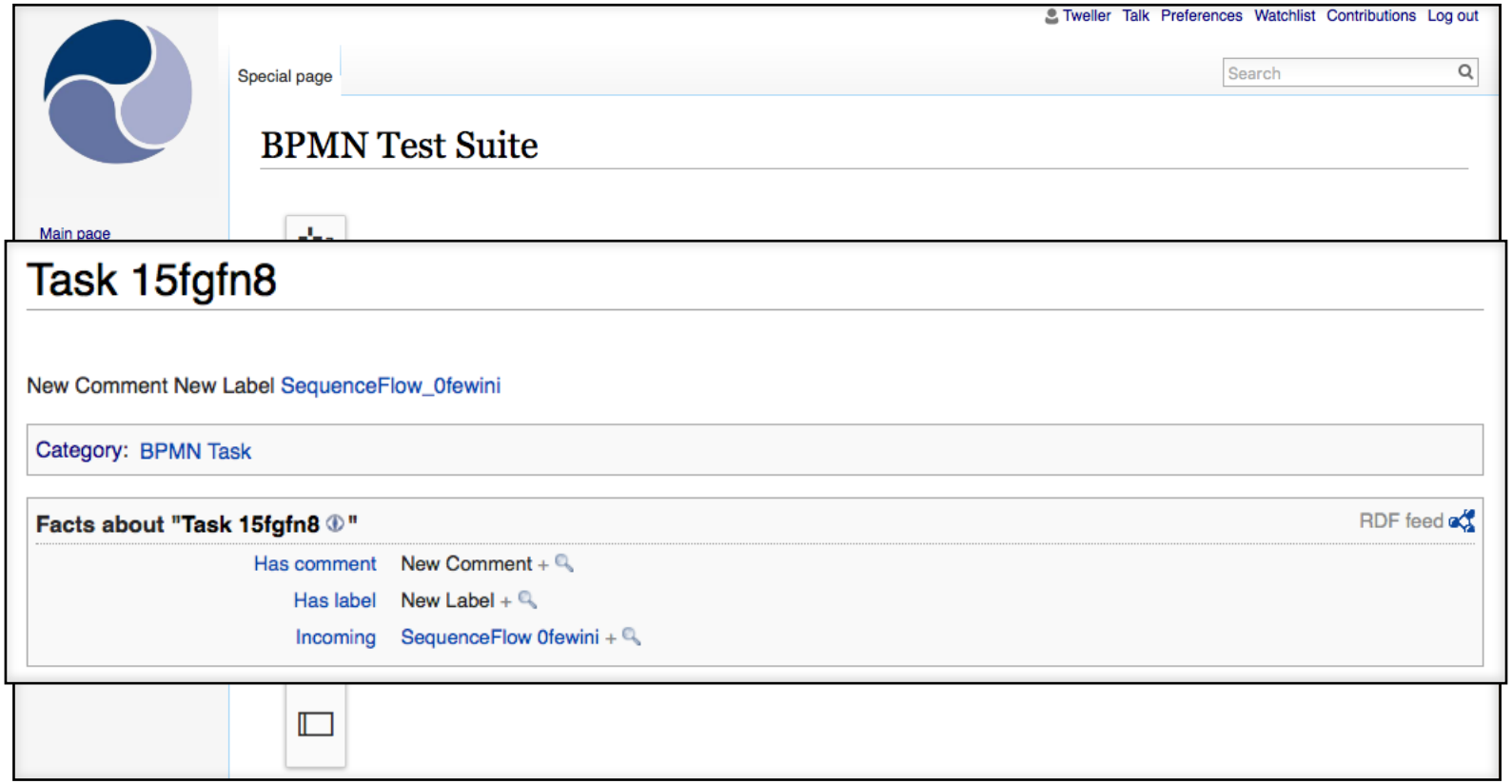

SBPMN: Change Element (Content)

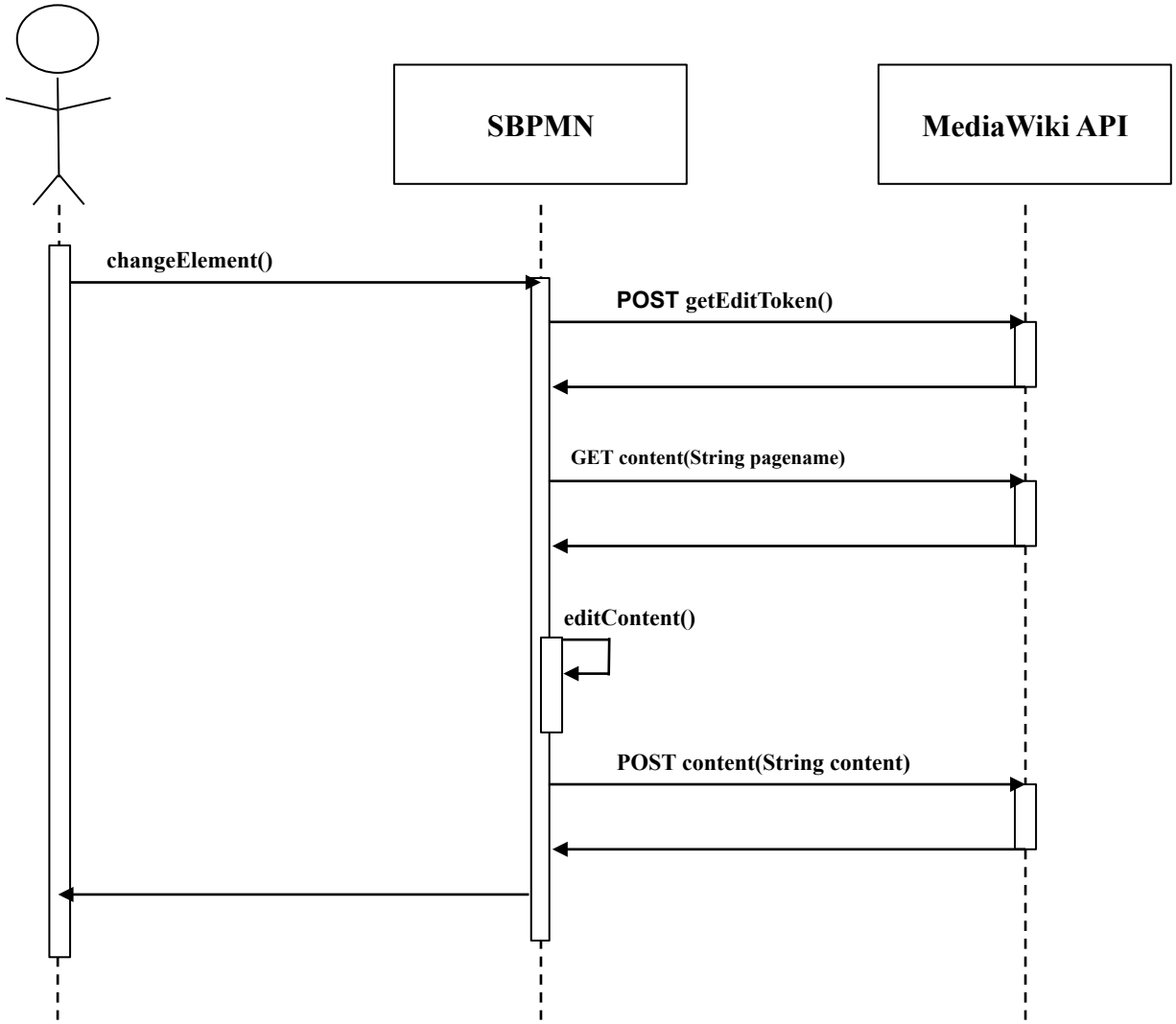

SBPMN: Delete Element

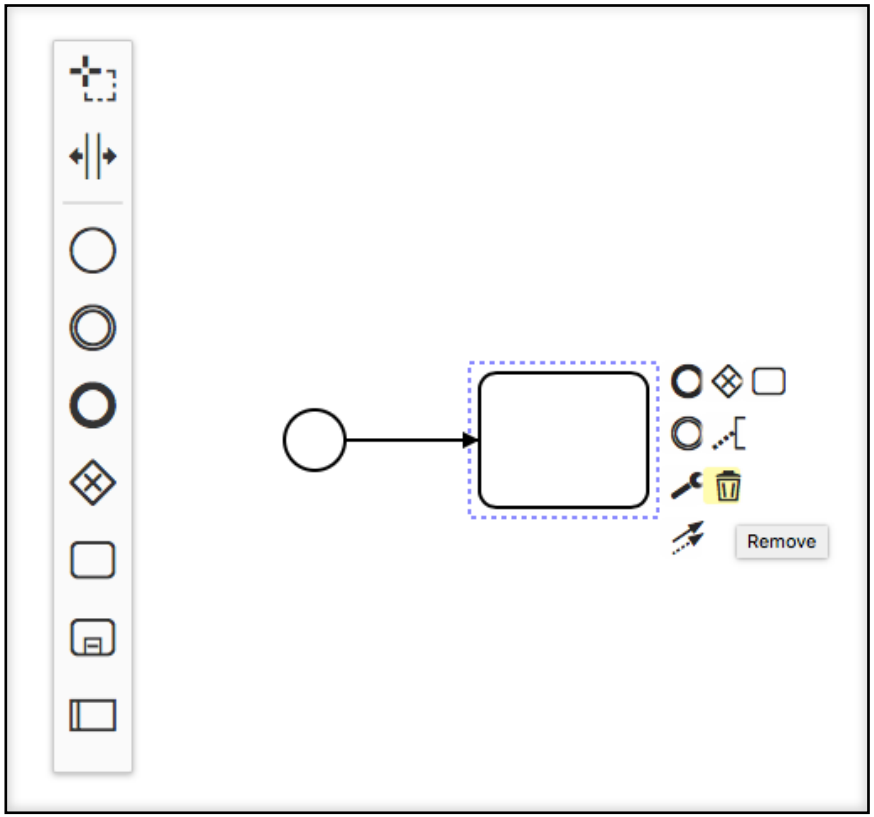

SBPMN: Delete Element

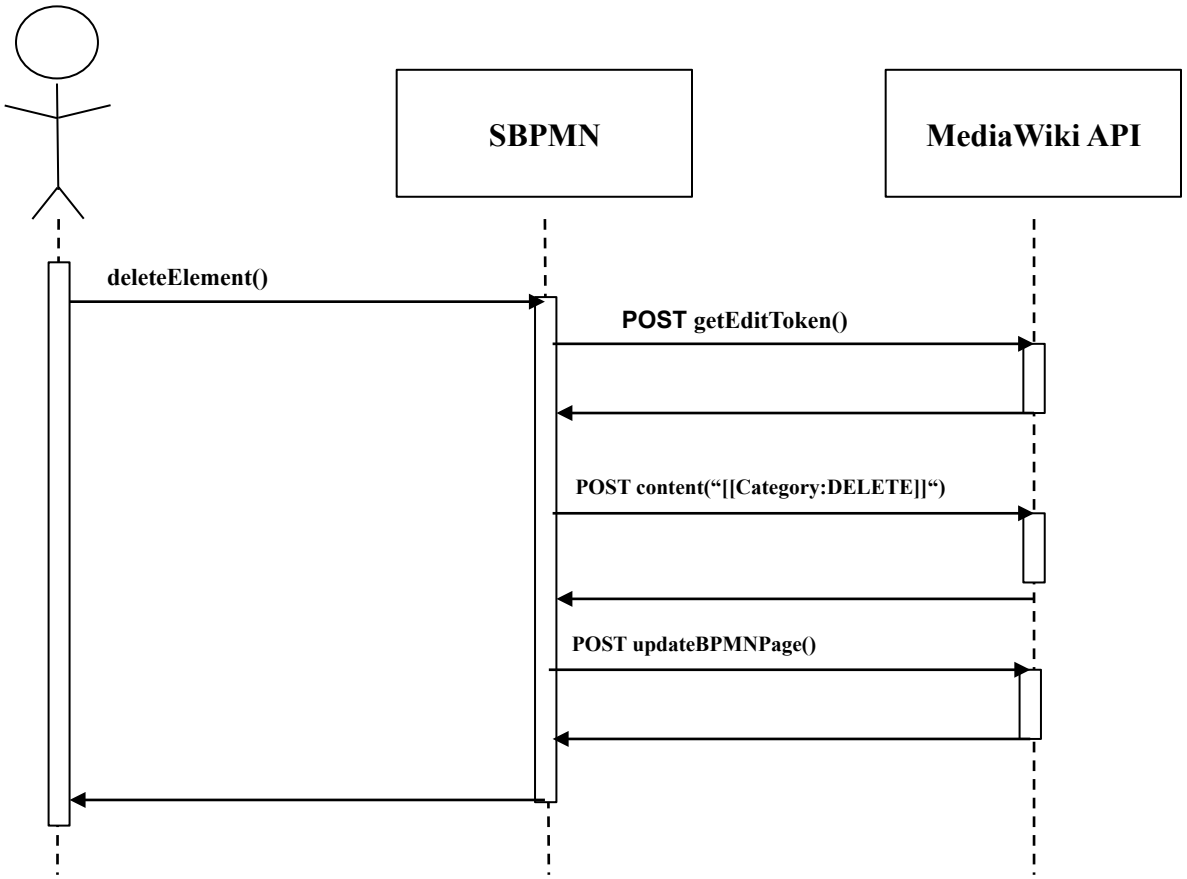

Functionalities of SBPMN

- Create new Diagram/Elements
- Upload existing Diagram
- Export Diagrams
- Change BPMN elements and sequence flows
- Delete elements and sequence flows

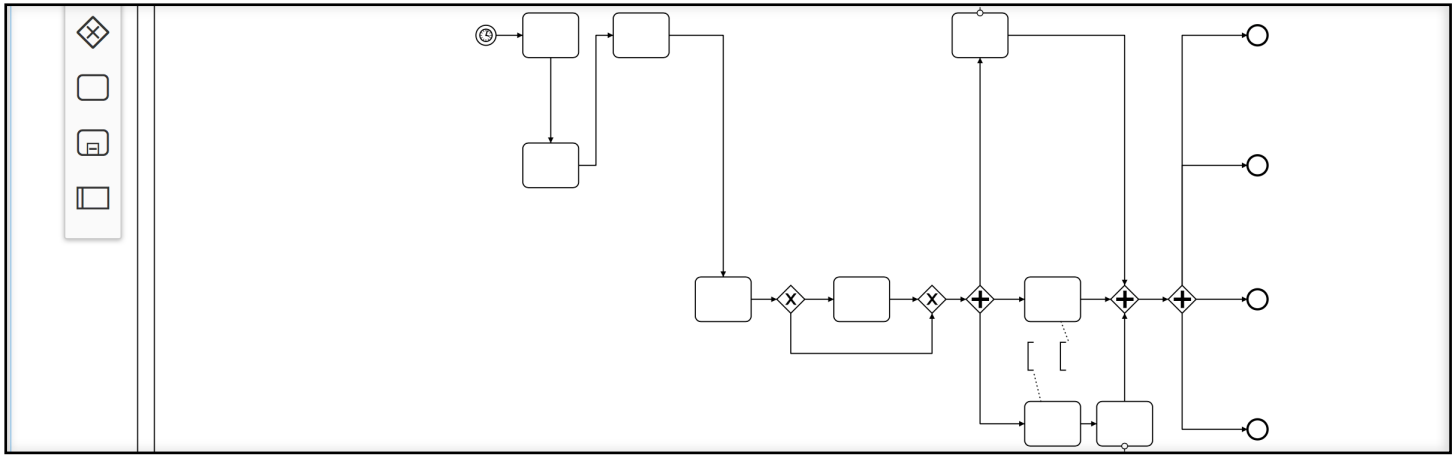

Conclusion

- Usage:
  - Modeling clinical pathways
  - Modeling decision trees
  - Arranging algorithms
  - Automatic execution of clinical pathways and decision trees
- Discover new clinical pathways
- Analyze and optimize clinical pathways

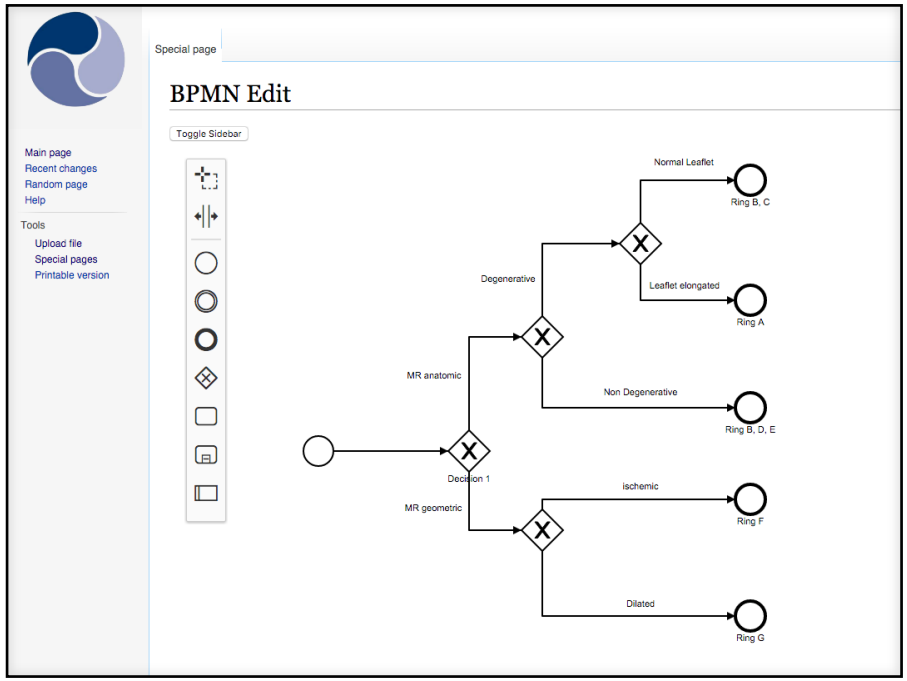

- Future Work
  - Use SMWWriter API
  - Create GUI to annotate pages